N900 (RX51) Main Circuit Block Diagram

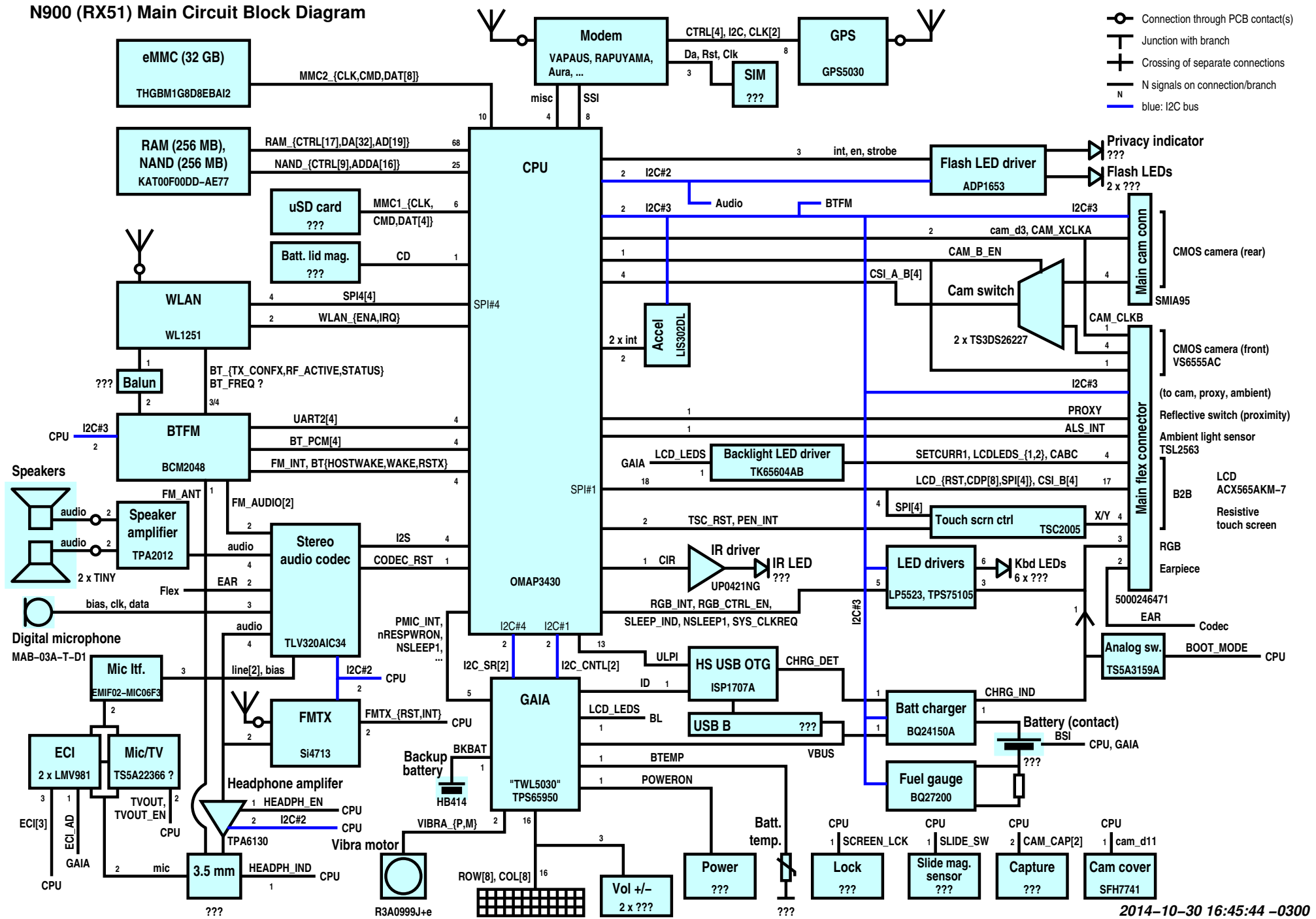

2014-10-30 16:45:44 -0300