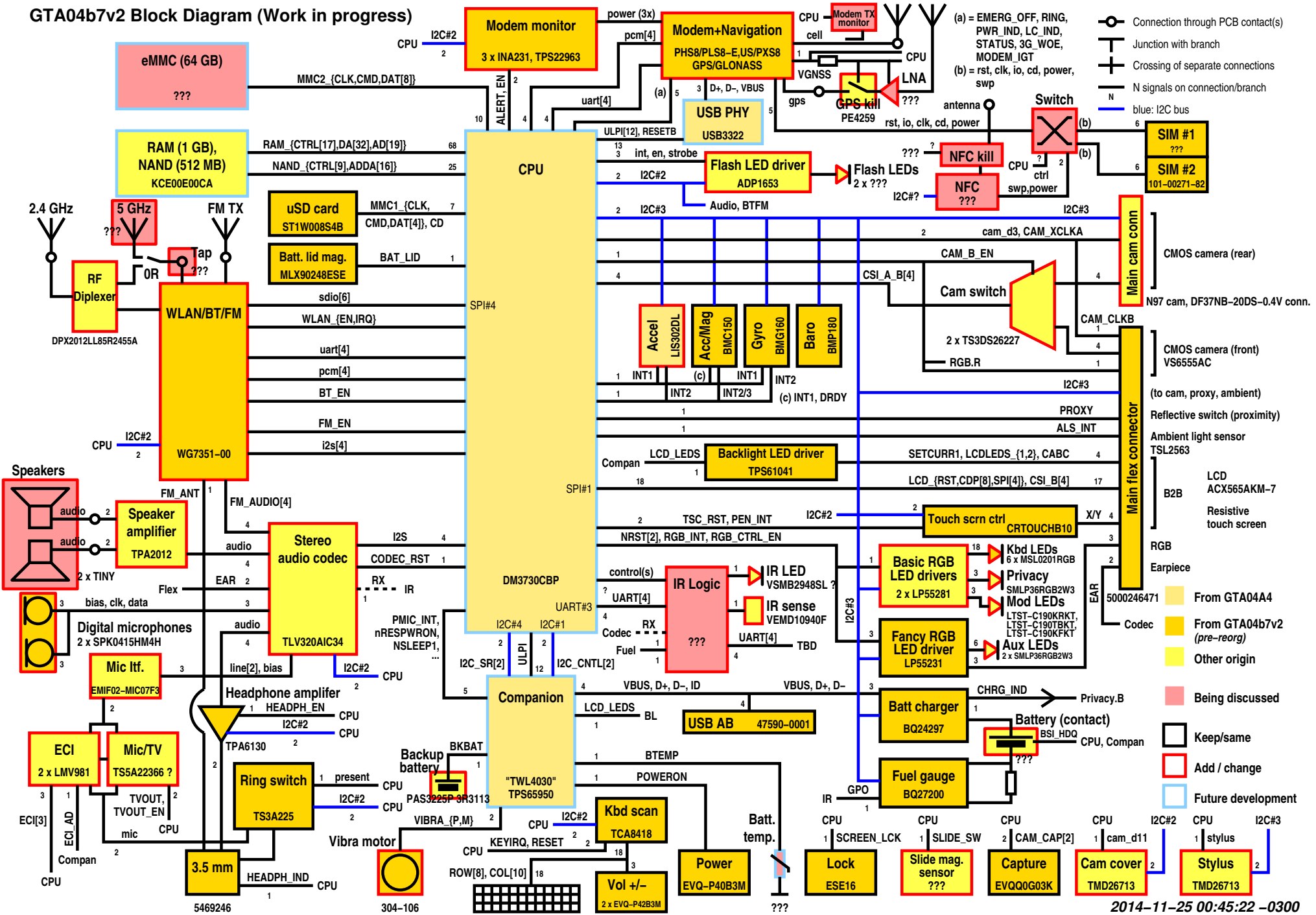# GTA04b7v2 Block Diagram (Work in progress)