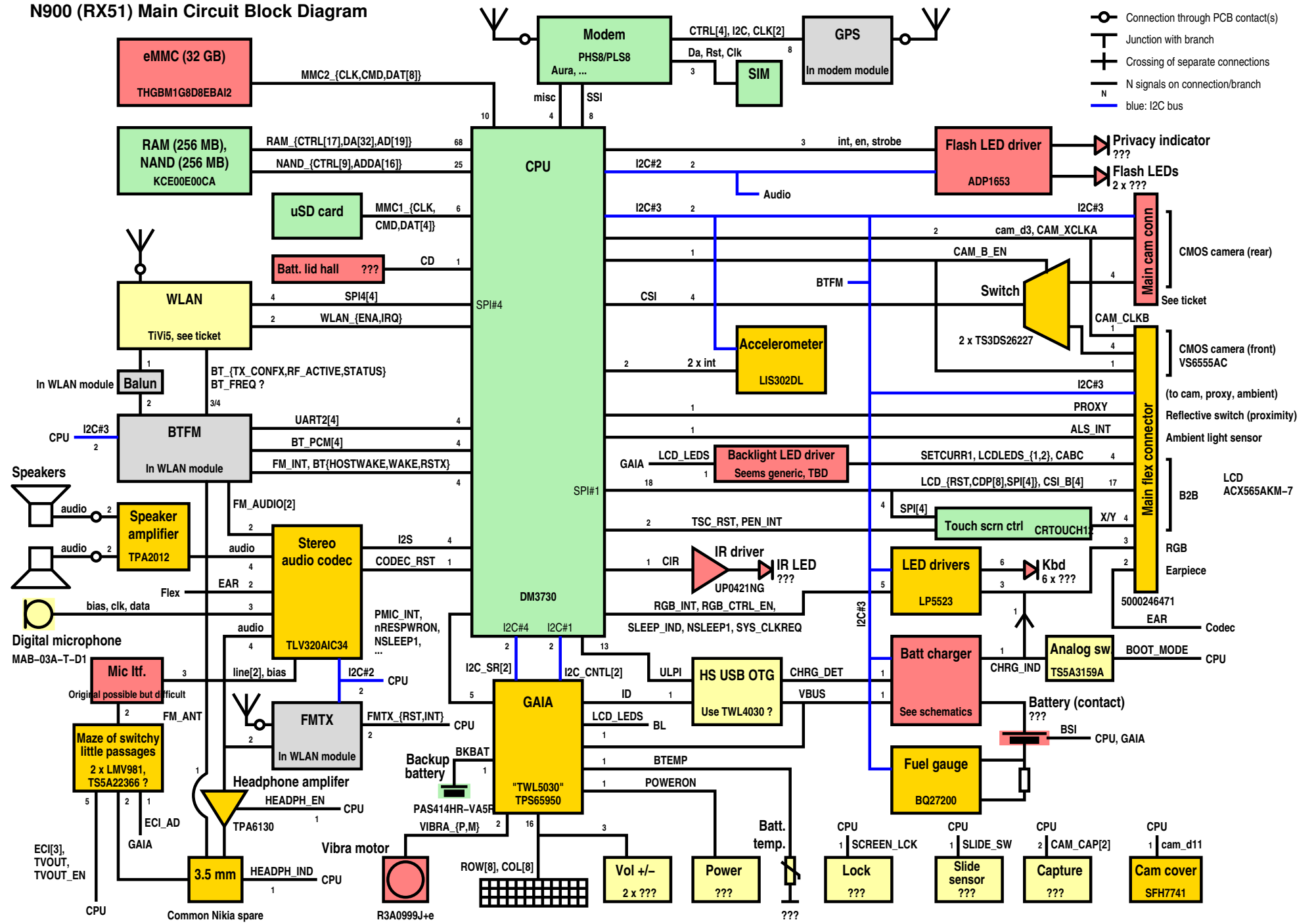N900 (RX51) Main Circuit Block Diagram